www.hrcdistribution.com

E4RSII
E4 Racing Spec. the Second Generation

Date: 11 December 2011 Driver: Lionel Troyon

Event: Swiss Indoor Championship round 2 Track: HVBRS - Islikon

SETUP SHEET

THE POWER OF TEAM MAGIC

TRACK CONDITIONS

Type :	☑ Carpet	☐ Asphalt		Size:	☐ Open	☑ Med.	☐ Tight
Place :	☑ Indoor	☐ Outdoor		Traction:	☐ High	☑ Med.	☐ Low
Surface:	☐ Smooth	☑ Med.	☐ Bumpy	Track Temp/Air Temp:	22° / 22°		

Note:

FRONT SUSPENSION

Track Width: 186 mm
Toe Angle: 0.5 °
Caster: 4 °
Camber: 1.5 °
Ride Height: 5.0 mm
Down Stop: 31.2 under wheel axle mm

☐ Gear Diff wt
☐ Ball Diff
☐ One Way
☑ Solid Axle

Anti-Roll Bar: ∅ 1.3 mm

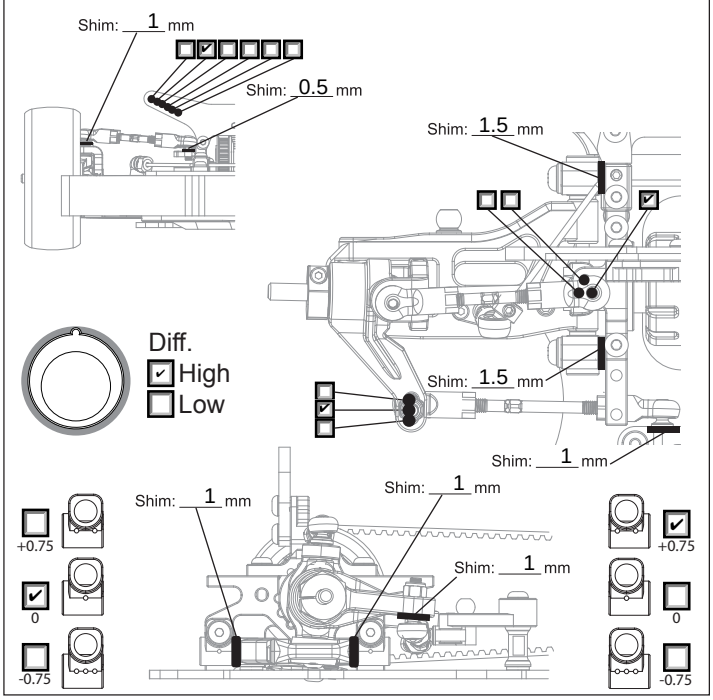

REAR SUSPENSION

Track Width: 186 mm
Toe Angle: 2.5 °
Camber: 1.5 °
Ride Height: 5.2 mm
Down Stop: 30.8 under wheel axle mm

☑ Gear Diff 700 wt
☐ Ball Diff
☐ Solid Axle

Anti-Roll Bar: ∅ 1.3 mm

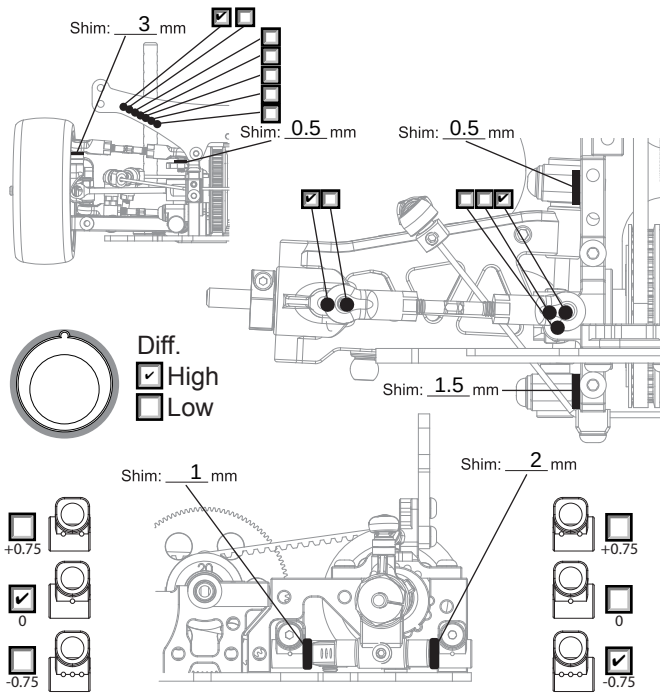

STIFF SETTING

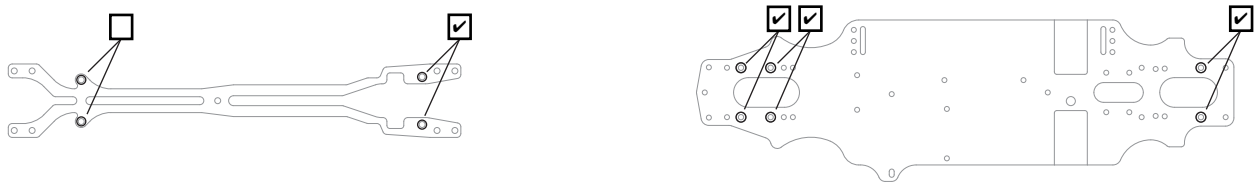

ELECTRONICS

Servo: Sanwa SRG-BL
ESC: SP Cirtix Club
Battery: Reedy 5500 60C

MOTOR

Brand: SP V3.0
Turns: 13.5
Timing: 10°

ESC

Punch:
Initial Brake:
Drag Brake: 40%
☐ ESC Timing ☐ Turbo Timing

DRIVE RATIO

Spur 74 T / Pinion 32 T X1.9 = 4.39

TIRES

Insert: Ride
Wheel: Ride
Shore/deg: Ride 32
Compound:
Tire Temp: ambiant temp
Tire additive: GreenRC Ultra
Treated Area

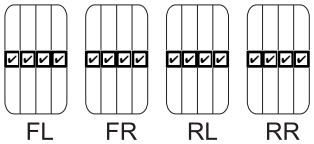

SHOCKS

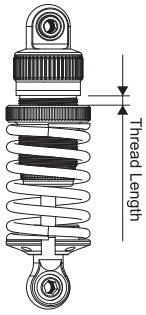

Hole Size: F original R original
Holes In Piston: F 2 R 2
Oil wt: F Ultimate 500 R Ultimate 650
Springs: F Ride Red R Ride Purple
Rebound: F 25% R 25%
Bladder Note:

Thread Length: F R

BODY

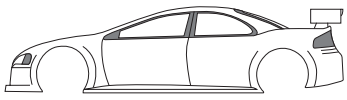

Body: Protoform LTC-R
Wing Height: Max
Wing Position: +10mm