www.hrcdistribution.com

E4RS II — E4 Racing Spec. the Second Generation

Date: 13/05/2012 Driver: F. Valantin

Event: practice Track: Monteux

SETUP SHEET

THE POWER OF TEAM MAGIC

TRACK CONDITIONS

Type :	☐ Carpet	☑ Asphalt		Size:	☐ Open	☑ Med.	☐ Tight
Place :	☐ Indoor	☑ Outdoor		Traction:	☐ High	☑ Med.	☐ Low
Surface:	☑ Smooth	☐ Med.	☐ Bumpy	Track Temp/Air Temp:	____ ° / 25 °		
				Note:			

FRONT SUSPENSION

Track Width: ____ mm

Toe Angle: 0 °

Caster: 4 °

Camber: 1,5 °

Ride Height: 5.2 mm

Down Stop: 6 mm

☐ Gear Diff ____ wt

☐ Ball Diff

☐ One Way

☑ Solid Axle

Anti-Roll Bar: ∅ 1,4 mm

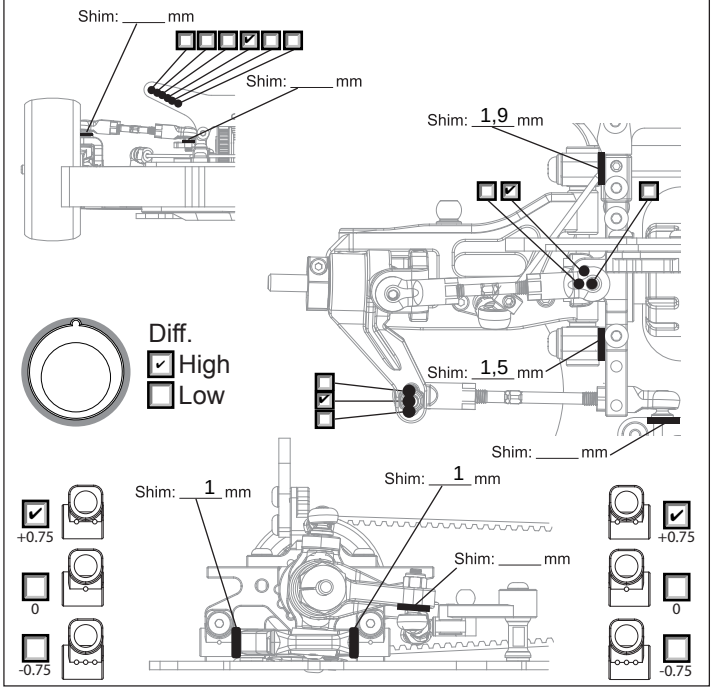

REAR SUSPENSION

Track Width: ____ mm

Toe Angle: 2.5 °

Camber: 1 °

Ride Height: 5.2 mm

Down Stop: 5 mm

☑ Gear Diff 1000 wt

☐ Ball Diff

☐ Solid Axle

Anti-Roll Bar: ∅ 1,2 mm

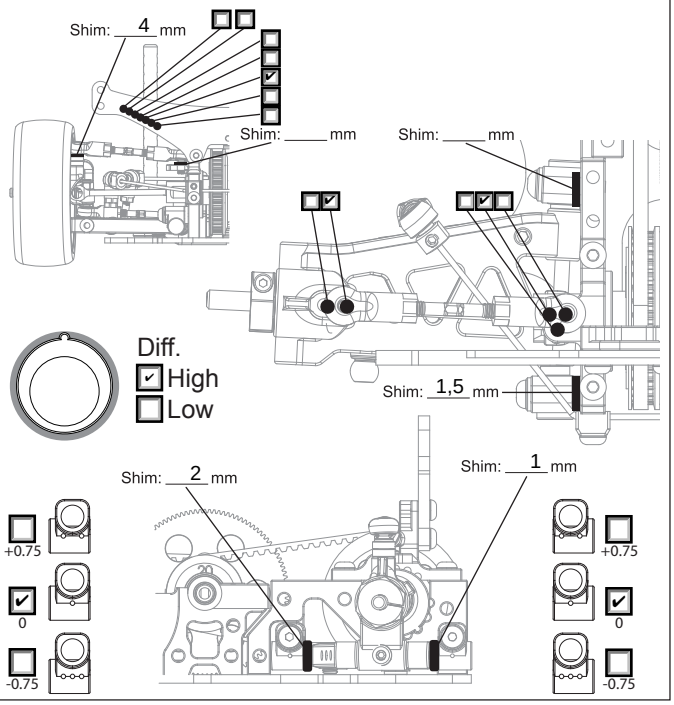

STIFF SETTING

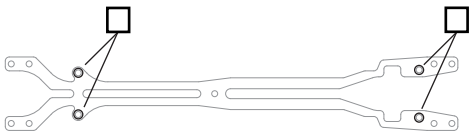

Upper Deck: ◉ 2.0mm ○ 2.3mm ○ 2.5mm

Chassis: ◉ 2.3mm ○ 2.5mm ○ 3.0mm

ELECTRONICS

Servo: Sanwa SRG BL

ESC: HW V3

Battery: IP 6800

MOTOR

Brand: Thunder Power

Turns: 10.5

Timing: 40°

ESC

Punch:

Initial Brake:

Drag Brake:

☐ ESC Timing ☐ Turbo Timing

DRIVE RATIO

Spur 96 T / Pinion 40 T X1.9 = 4.56

TIRES

Insert:

Wheel:

Shore/deg: Ride 36

Compound:

Tire Temp:

Tire additive: MR

Treated Area

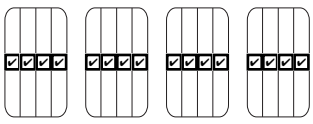

SHOCKS

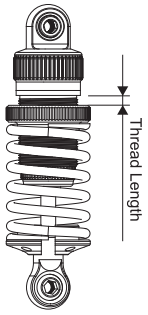

Hole Size: F stock R stock

Holes In Piston: F 2 R 2

Oil wt: F 500 R 500

Springs: F TOP 306 R TOP 306

Rebound: F 20 R 20

Bladder Note:

Thread Length: F ____ R ____

BODY

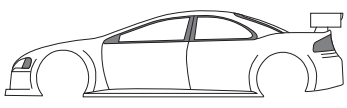

Body: PF P37

Wing Height:

Wing Position: