www.hrcdistribution.com

Date: 23-24/03/2013 Driver: Walter POLLET-VILLARD

Event: CF-1 2013 Track: LOOS

SETUP SHEET

TRACK CONDITIONS

Type :	☑ Carpet	☐ Asphalt		Size:	☐ Open	☑ Med.	☐ Tight	
Place :	☐ Indoor	☐ Outdoor		Traction:	☐ High	☑ Med.	☐ Low	
Surface:	☐ Smooth	☑ Med.	☐ Bumpy	Track Temp/Air Temp:	20 °	/	18 °	

Note: KF2237-1,KF2238,KF2243,KF2228,KF2229,KF2226,KF2225,KF2219,KF2217,KF2210,KF2201-1S

FRONT SUSPENSION

Track Width: 188 mm
Toe Angle: +0.5 °
Caster: 4 °
Camber: 1 °
Ride Height: 5 mm
Down Stop: 36 mm

☐ Gear Diff ____ wt
☐ Ball Diff
☐ One Way
☑ Solid Axle

Anti-Roll Bar: ∅ 1.3 mm

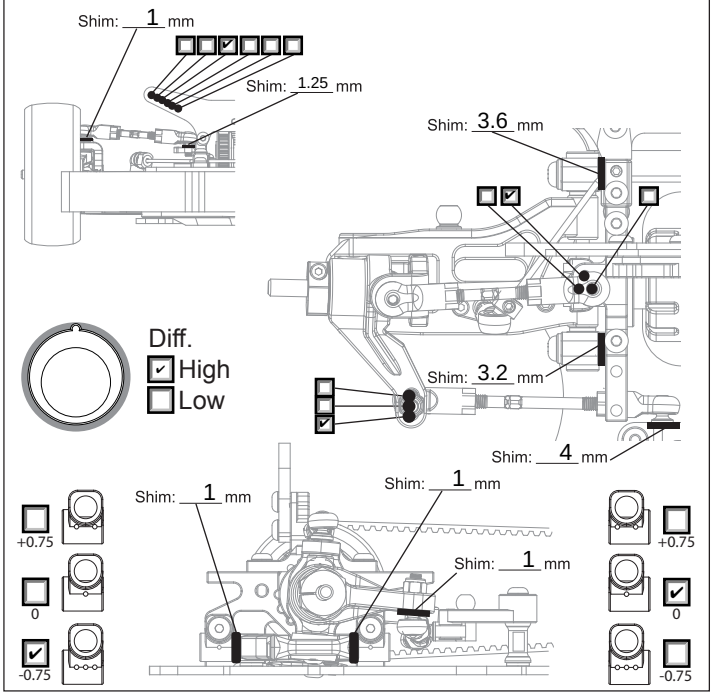

REAR SUSPENSION

Track Width: 188 mm
Toe Angle: 3 °
Camber: 2 °
Ride Height: 5 mm
Down Stop: 37 mm

☑ Gear Diff 3000 wt
☐ Ball Diff
☐ Solid Axle

Anti-Roll Bar: ∅ 1.2 mm

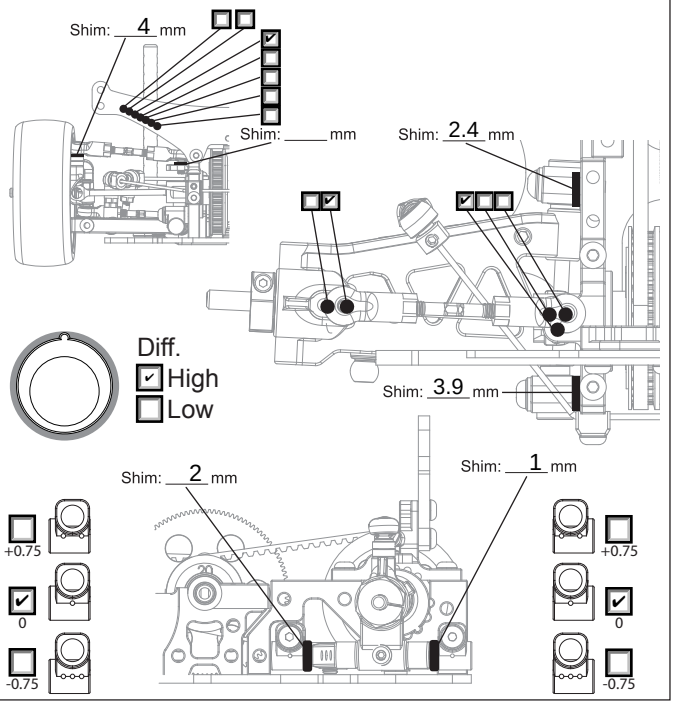

STIFF SETTING

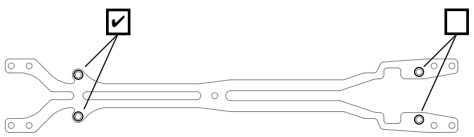

Upper Deck: ◉2.0mm ○2.3mm ○2.5mm

Chassis: ◉2.3mm ○2.5mm ○3.0mm

ELECTRONICS

Servo: Sanwa SRG-BLS
ESC: HW V3 PRT edition
Battery: IP 7200 PRT edition

MOTOR

Brand: PRT 2010
Turns: 7.5
Timing: 0

ESC

Punch: 0
Initial Brake: DragBrake
Drag Brake: 7%
☑ ESC Timing ☑ Turbo Timing
7.5-37.5 25° + 0.15 30°

DRIVE RATIO

Spur 110 T / Pinion 26 T X1.9 = 8.04

TIRES

Insert: Ride Re36/26006
Wheel: Ride Re36/26006
Shore/deg: 36
Compound: Ride
Tire Temp: 42
Tire additive: Cs Yellow 5min
Treated Area

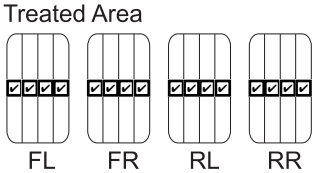

SHOCKS

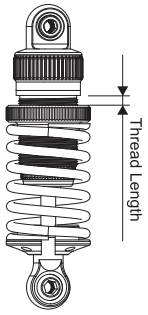

Hole Size: F 1.2+1.3 R 1.2+1.3
Holes In Piston: F 2 R 2
Oil wt: F 450 R 450
Springs: F Ride Purple R Hara 2
Rebound: F 25% R 25%
Bladder Note: Stock

Thread Length: F 1.8 R 2

BODY

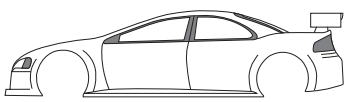

Body: Mazda Speed 6
Wing Height: Max
Wing Position: Max