blog.hrcDistribution.com // www.hrcDistribution.com

# E4RS III+ SETUP SHEET

Date: 27.03.2016 Driver: Aurélien Rivard

Event: French Nats Rd1 Track: CARCB Marmagne

## TRACK CONDITIONS

Type : ☐ Carpet ☒ Asphalt Size: ☒ Open ☐ Med. ☐ Tight

Place : ☐ Indoor ☒ Outdoor Traction: ☐ High ☒ Med. ☐ Low

Surface: ☐ Smooth ☒ Med. ☐ Bumpy Track Temp/Air Temp: 15 ° / 15 °

Note:

## FRONT SUSPENSION

Track Width: mm

Toe Angle: -2 °

Caster: 4 °

Camber: 2 °

Ride Height: 5.2 mm

Down Stop: 5.6 mm

☐ Gear Diff wt

☐ One Way

☒ Spool

Anti-Roll Bar: ∅ 1.3 mm

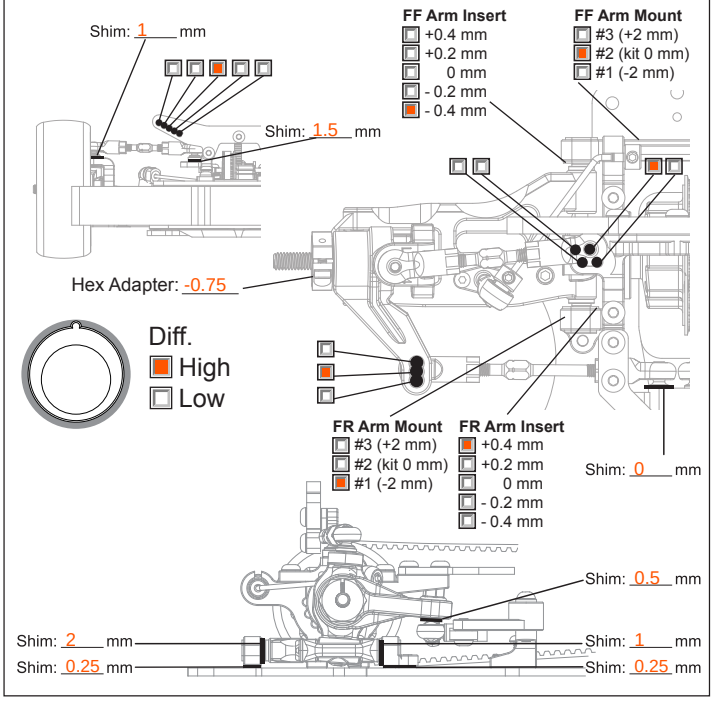


## REAR SUSPENSION

Track Width: mm

Toe Angle: 1.4 °

Camber: 2 °

Ride Height: 5.4 mm

Down Stop: 4.4 mm

☒ Gear Diff 7'000 RB wt

Anti-Roll Bar: ∅ 1.3 mm

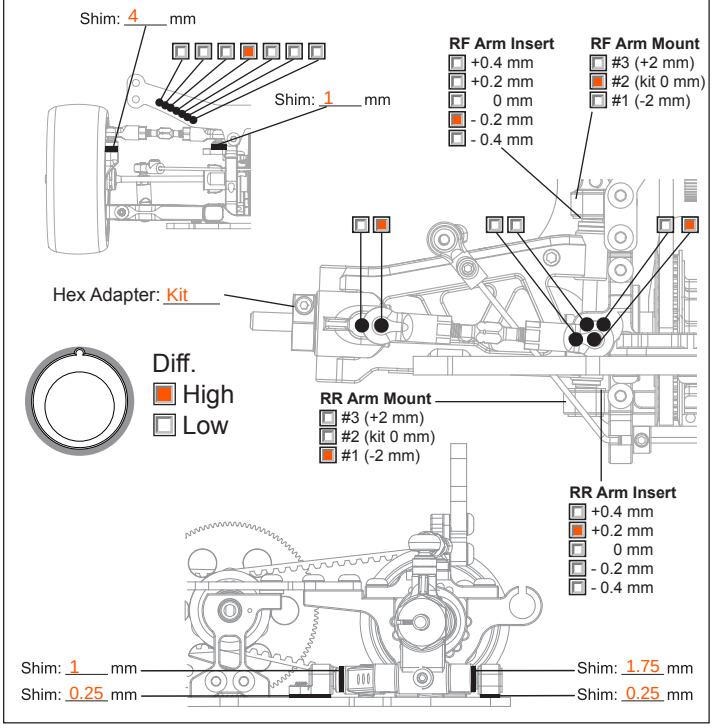


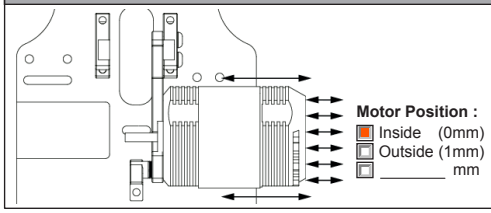


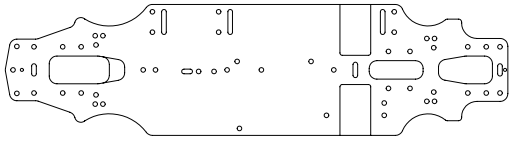

Chassis: ☐ 2.3 mm ☒ 2.5 mm ☐ Aluminum

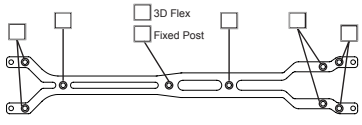


Upper Deck: ☐ 2 mm ☒ 2.3 mm ☐ 2.5 mm

## ELECTRONICS

Servo: Futaba BLS551

ESC: Hobbywing V3.2

Battery: IP 6000 100C

## MOTOR

Brand: PRT

Turns: 10.5

Timing: 65°

## ESC

Punch:

Initial Brake:

Drag Brake: 4

☐ ESC Timing ☐ Turbo Timing

## DRIVE RATIO

Spur 110 T / Pinion 34 T X1.9 = 6.15

## TIRES

Insert: Volante 36

Wheel:

Shore/deg:

Compound:

Tire Temp: 65°

Tire additive: LRP Carpet 2

Treated Area

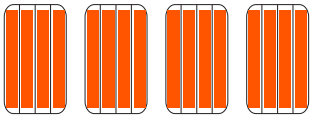

FL FR RL RR

## SHOCKS

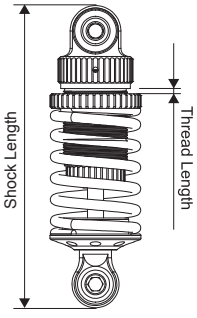


| | F | R |
|---|---|---|
| Hole Size: | 1.1 | 1.1 |
| Holes In Piston: | 3 | 3 |
| Shock Oil WT: | 350 | 350 |
| Shock Springs: | TM P2.7 | TM L2.7 |
| Shock Rebound: | 25% | 25% |
| Bladder Note: | | |
| Thread Length: | | |
| Shock Length: | | |

## BODY

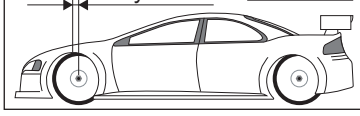

Body Position: -8mm

Body: Protoform LRC-R

Wing Height: Max

Wing Position: Max