www.teammagicrc.com

E4RS4

Date: 21.10.2017 Driver: Paulo

Event: Training Track: ARCB Fétigny

SETUP SHEET

TRACK CONDITIONS

Type : ■ Carpet ☐ Asphalt Size: ☐ Open ☐ Med. ■ Tight

Place : ■ Indoor ☐ Outdoor Traction: ☐ High ■ Med. ☐ Low

Surface: ☐ Smooth ☐ Med. ■ Bumpy Track Temp/Air Temp: ____ ° / 18 °

Note: (must try rear anti roll bar 1.3) = Perfect = Track Record 9.438

FRONT SUSPENSION

Track Width: 189 mm

Toe Angle: 1 °

Caster: 4 °

Camber: 1.5 °

Ride Height: 5.0 mm

Down Stop: 5.4 mm

☐ Gear Diff ____ wt

■ Spool

Anti-Roll Bar: ∅ 1.3 mm

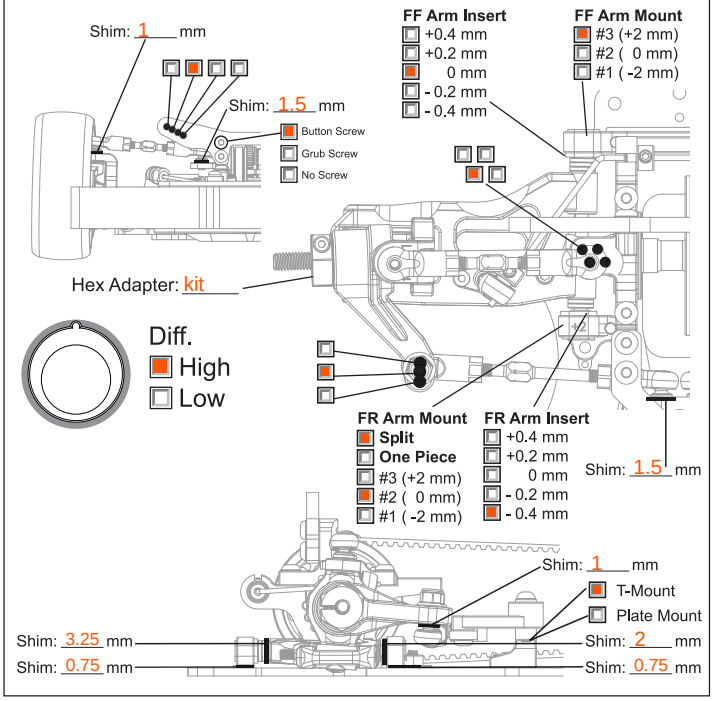

REAR SUSPENSION

Track Width: 186 mm

Toe Angle: 2.7 °

Camber: 1.5 °

Ride Height: 5.2 mm

Down Stop: 5 mm

Gear Diff ____ wt

Anti-Roll Bar: ∅ 1.2 mm

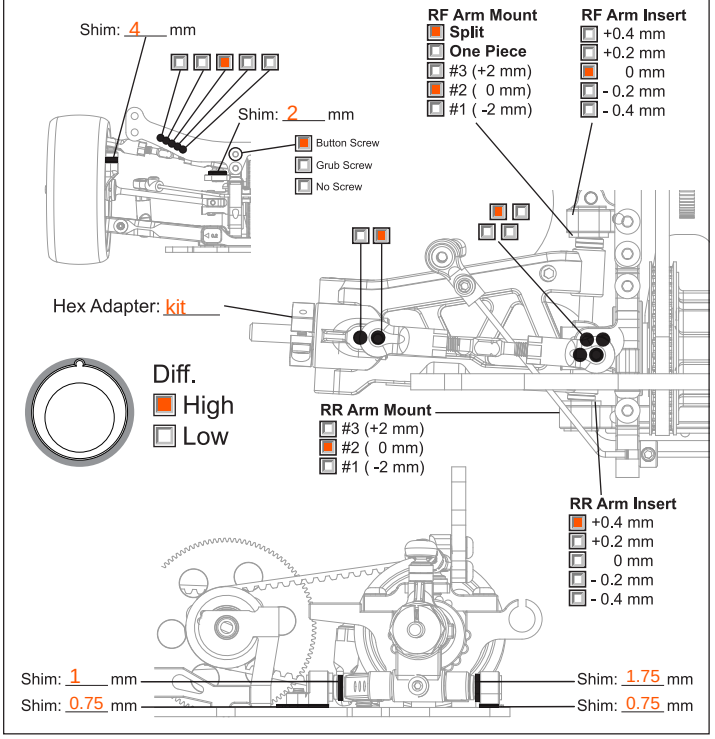

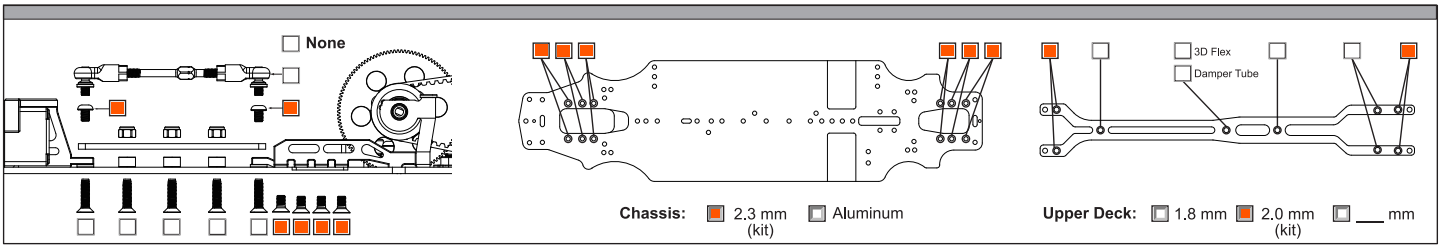

ELECTRONICS

Servo: KO

ESC: Hobbywing XR10 Pro

Battery: Orion 5800

MOTOR

Brand: Hobbywing

Turns: 13.5 T

Timing: 30

ESC

Punch: 30

Initial Brake: = Drag Brake

Drag Brake: 8

■ ESC Timing ■ Turbo Timing

50 10

DRIVE RATIO

Spur 100 T / Pinion 26 T X1.9 = 7.31

TIRES

Insert: ____

Wheel: Muchmore Volante

Shore/deg: 28

Compound: ____

Tire Temp: ____

Tire additive: CS High Grip

Treated Area

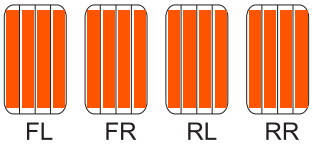

FL FR RL RR

SHOCKS

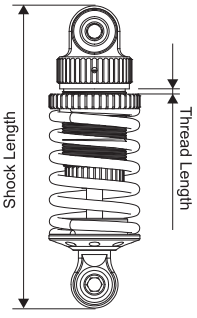

	F	R
Hole Size:	1.2 mm	1.2 mm
Holes In Piston:	4	4
Shock Oil WT:	500	500
Shock Springs:	P 2.6	L 2.6
Shock Rebound:	0	0
Bladder Note:	Kit	
Thread Length:		
Shock Length:		

BODY

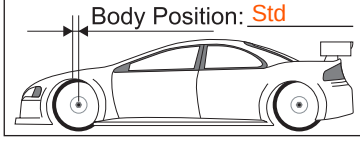

Body Position: Std

Body: Montech IS 200

Wing Height: Original

Wing Position: Original